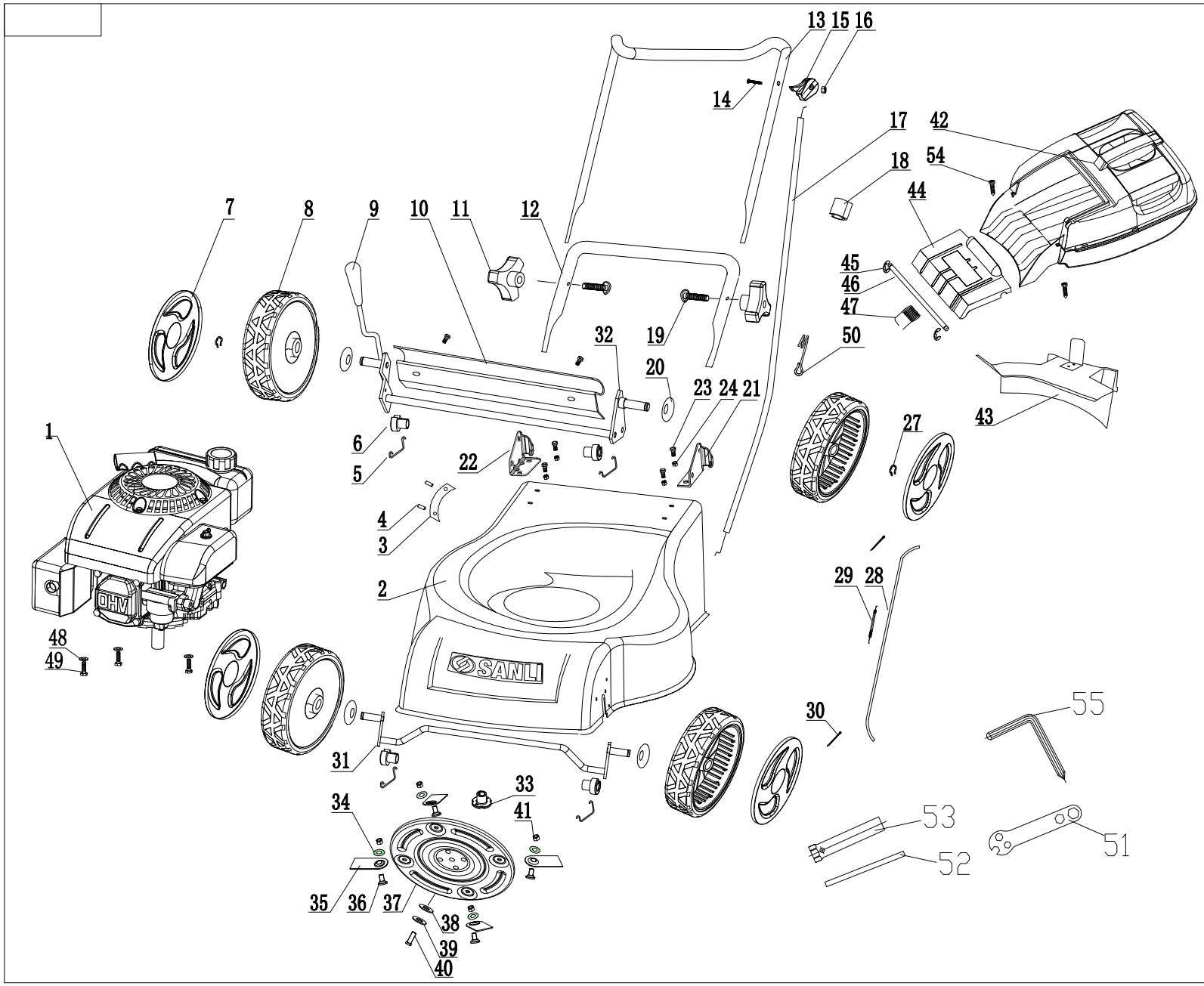

No.	Item No.	Description	Qty
55	SL42T-10004	Philips screw driver	1
54	GB846-1985	Self tapping screwST4.2×20	2
53	SL42T-10001	Single spark plug sleeve	1
52	SL40T-A10003	lorison level	1
51	SL42Z-10101	Muliple functional spawner	1
50	SL42T-05108	Starter clip	1
49	GB/T9074.17	Bolt M8×32	3
48	GB5789-1986	Washer φ8.2×φ24×3	3
47	SL46-5Z04107	Rear flap spring	1
46	SL46-5Z04109	Rear flap axle	1
45	GB/T896-1986	Circlip	2
44	SL46-5T04102	Rear flap	1
43	SL46-5T04108	Gass block board	1
42	SL46-5T04010	Grass catcher assembly	1
41	GB/T6187-2000	Nut M8	4
40	SL40T-A02102	Blade disc bolt	1
39	GB93-1987	Washer 10	1
38	GB/T96-2002	Key φ10.5×φ30×3	1
37	SL46-5T02103	Blade disc	1
36	SL42T-02102	Blade nut	4
35	SL42T-02101	Cutting blade	4
34	SL42T-02104	Washer	4
33	SL42T-02105	Blade flange	1
32	SL46-5T07030	Rear axle jointing assembly	1
31	SL46-5T07020	Front axis comp.	1
30	GB91-2000	Retainer ring 2×20	2
29	SL42T-03103	Extension spring	1
28	SL46-5T03010	Linkage	1
27	SL42T-07105	Block spring	4
24	GB/T6187	Nut M8	8
23	GB5789-1986	Bolt M8×18	8
22	SL42T-04106	Right handle-mounting plate	1
21	SL42T-04105	Left handle-mounting plate	1
20	SL42T-07103	Dust-proof cover	4
19	SL40T-05110	Hand knob bolt M8×45	2
18	SL42T-05107	Cable retainer	1
17	SL46-5Z05040	Throttle cable	1
16	GB/T6177.1-2000	Nut M6	3
15	SL42T-05010	Throttle cable comp.	1
14	GB/T5789-1976	Bolt M6×45	1
13	SL46-5T05101	Upper handle	1
12	SL46-5T05102	Lower handle	2
11	SL40T-05015	Triangle nut	2
10	SL46-5T07303	Rear shield	1
9	SL42T-03012	Height adjustment comp.	1
8	SL46-5T07010	Wheel	4
7	SL46-5T07102	Wheel cover	4
6	SL42T-07108	Front axis fixer	2
5	SL42T-07306	Spring	2
4	GB/T12618-1990	Rivet 5X12	7
3	SL42T-01103	Heighe adjustment board	1
2	SL46-5T01001	Deck	1
1	SL1P64	Engine	1