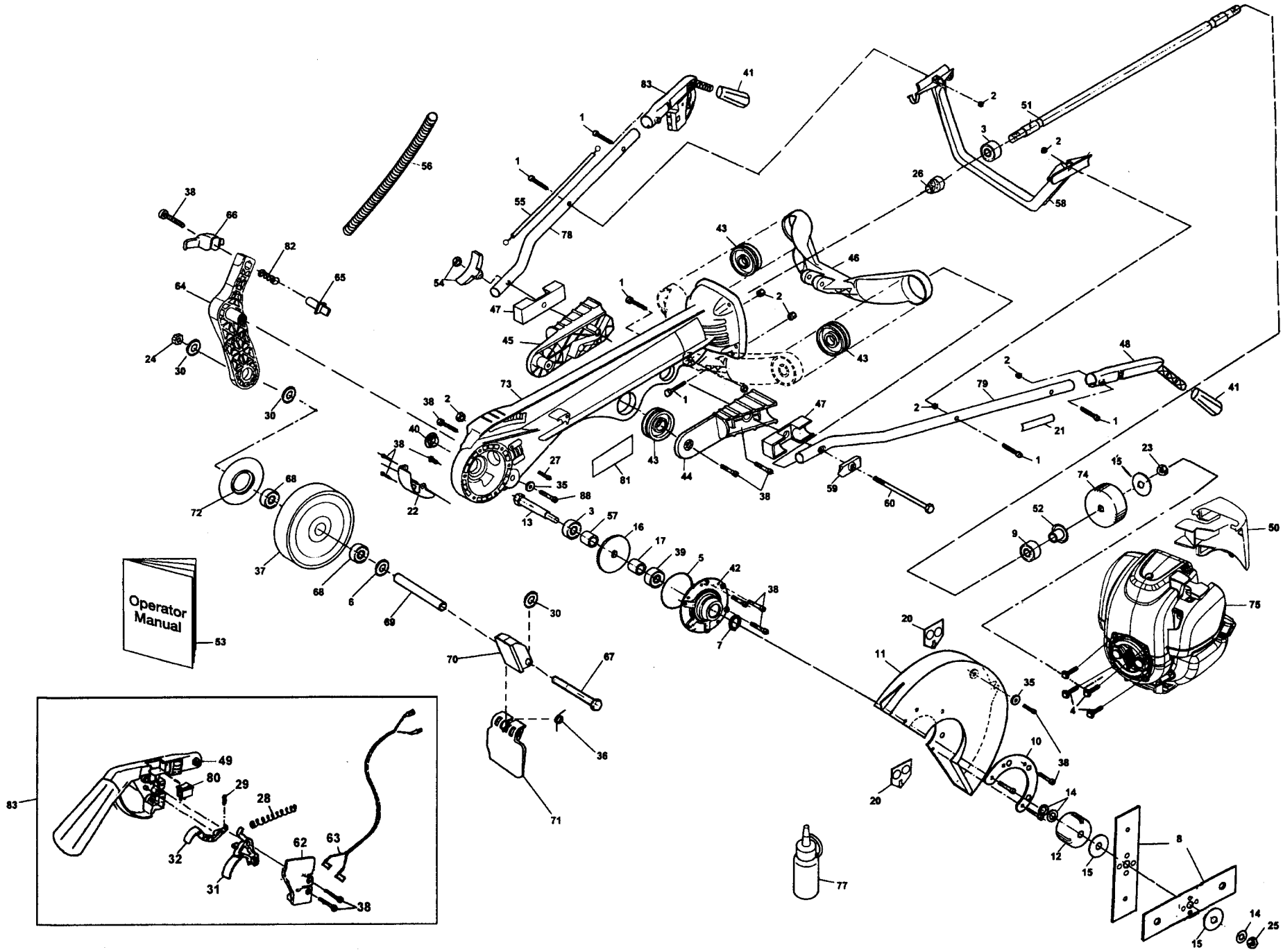

/// ATOM MODEL 506 LAWN EDGER PARTS LIST

/// ATOM MODEL 506 LAWN EDGER PARTS LIST

KEY #	PART #	DESCRIPTION
1	40650	SCREW M5 x 36mm
2	40652	NUT NYLOC 5mm
3	40835	N.BEARING 32 x 10 x 12 W/SEAL
4	40838	HEX SCREW 6MM x 19MM
5	40906	"O" RING 64 x 1.75mm"
6	42111	SEALS NYLON OD27.2 x ID12.60
7	42112	FELT SEAL
8	43105	CUTTER BLADE SET (form & straight)
9	43108	BEARING 37 x 12 x 12
10	43109	BLADE COVER SUPPORT
11	43110	BLADE COVER
12	43112	BLADE DRUM
13	43114	BLADE SHAFT DRIVE
14	43115	BLADE WASHER SMALL
15	43116	BLADE WASHER LARGE
16	43122	CROWN GEAR L/E
17	43125	SPACER 15.5MM
19	43127	WARNING LABEL HOT MOTOR
20	43128	WARNING LABEL BLADE COVER
21	43133	WARNING LABEL HANDLE
22	43155	MAIN BODY SHIELD (N)
23	43163	FLANGE NUT 3/8 UNC
24	43172	NUT NYLOC 3/8
25	43173	NUT M12 X 1.75
26	43176	PINION GEAR LONG 25.4mm
27	43179	BEARING SCREW M5 X 39
28	43198	TRIGGER COMP.SPRING
29	43199	"SPRING,SMALL"
30	43218	FLAT WASHER 9.77x19.05x1.6 Z/P
31	43288	THROTTLE TRIGGER
32	43292	THROTTLE INTERLOCK
33	43406	LABEL PROFESSIONAL
34	43419	LABEL MODEL 506
35	43484	WASHER 22.43 x 5.94 Z/P
36	43719	DEBRIS DEFLECTOR SPRING
37	43765	WHEEL ONLY
38	43790	SCREW 5.5mm for plastic
39	43860	BEARING 32x10x12 + 4mm
40	43910	DUST PLUG RED
41	43922	RUBBER HANDLE GRIP
42	43941	MAIN BODY COVER(new)
43	43951	PRO ROUND AV RUBBER
44	43952	L.H. AV MOUNT

KEY #	PART #	DESCRIPTION
45	43953	R.H. AV MOUNT
46	43954	MAIN HANDLE BRACKET
47	43955	HANDLE AV RUBBER
48	43961	PRO L.H HANDLE
49	43963	RH HANDLE SUIT RUBBER GRIP
50	43965	HONDA AIR DEFLECTOR(GX35)
51	43978	PRO SHAFT (USES FLANGED NUT)
52	43980	FLANGE BUSH SPACER
53	43990	MANUAL HONDA MODEL 506
54	44003	HANDLE KNOB w/nut (44006 + 44075)
55	44010	PRO THROTTLE CABLE ASSY
56	44012	CORRUGATED LOOM 400mm
57	44016	SPACER 8.35MM
58	44062	HANDLE CROSS BRACE
59	44064	HANDLE BOLT HEX PIECE BLACK
60	44074	"HANDLE BOLT 1/4"" X 6"" BSW"
61	44075	BLACK HANDLE KNOB (refer Key #54)
62	44085	TRIGGER COVER W/OUT SLOT
63	44165	SWITCH WIRE 505/506 HONDA
64	44301	PRO AV2 WHEEL ARM
65	44302	HT ADJ PIN
66	44303	PRO AV2 HT ADJ HANDLE
67	44304	"WHEEL AXLE BOLT 3/8"" x 5.5"
68	44305	SEALED BEARING 28x8x12.8mm
69	44307	WHEEL AXLE TUBE SPACER 94.35mm
70	44308	PRO AV2 DEBRIS LIMITER
71	44309	PRO AV2 DEBRIS FLAP
72	44310	WHEEL HUB CAP
73	44311	PRO AV2 MAIN CASING
74	44312	PRO CLUTCH DRUM CUP(32mm LONG)
75	48002	HONDA GX35 ENGINE
76	48010	HONDA EXHAUST OUTLET (GX35)
77	48100	OIL 100ml (for Honda GX-31)
78	44060	HANDLE TUBE RH
79	44061	HANDLE TUBE LH
80	44440	ROCKER ON/OFF SWITCH
81	50650	ATOM LAWN EDGER LABEL
82	43452	ADJUSTING ARM SPRING
83	44087	RIGHT HANDLE TRIGGER ASSEMBLY
*	43935	CABLE ADJUSTER PIN
*	44005	BRASS 6.3mm QC TERMINAL
*	ITEMS NOT SHOWN ON DIAGRAM	